Classic 1 group

Ref: 602626
(CLASSIC1)

Traditional espresso machine, 1 group, 6.3 liter boiler, 4 programmable dosing program, manual steam & water, automatic cleaning cycle, stainless steel body

General Features

Traditional 1 group espresso machine with large steam boiler. Elegant lines and reliable technologies appreciated by coffee professionals, the CLASSIC model is made more attractive by its quality/ price ratio. Designed for rugged commercial application, the CLASSIC is the perfect traditional espresso machine to ensure an excellent quality espresso result, consistency and high performance during rush period.

Classic 1 group

Specifications

- The CLASSIC Elegant lines and reliable technologies appreciated by coffee professionals, the CLASSIC model is made more attractive by its quality/ price ratio. The CLASSIC is the perfect traditional espresso machine to ensure an excellent quality espresso result, and consistency even during the busiest periods of the day.
- Heavy duty components and welded construction, a direct mounted boiler group head for thermal stability and reliable extraction, easy access to components for uncomplicated servicability, and unlimited steam.
- Maestro brew group: directly to boiler group heads are mounted for shot temperature stability.
- Large cup warming capacity: integrated cup warmer on the top of the machines.
- 4 programmable volume keys per group + Semi-automatic key for each group for manual control.
- Automatic cleaning program.

Construction

- Built-in cup warmer.

Included Accessories

• 1 of Filter holder for one cup	PNC 871002
• 1 of Filter holder for two cups	PNC 871003

Optional Accessories

• Filter holder for one cup	PNC 871002	❑
• Filter holder for two cups	PNC 871003	❑
• Filter holder for three cups	PNC 871004	❑
• Filter for one cup, 12 gr	PNC 871017	❑
• Filter for two cups, 18 gr	PNC 871018	❑
• Stainless steel knock box drawer	PNC 871019	❑

UNIC

Classic 1 group

Electric

Supply voltage:	
602626 (CLASSIC1)	230 V/1N ph/50 Hz
Electrical power max.:	3 kW
Plug type:	Cable without plug

Water:

Cold water temperature (min/max):	5 / 60 °C

Key Information:

External dimensions, Width:	343 mm
External dimensions, Depth:	568 mm
External dimensions, Height:	580 mm
Net weight:	41 kg
Shipping volume:	0.32 m³
Sustainability	
Current consumption:	13 Amps

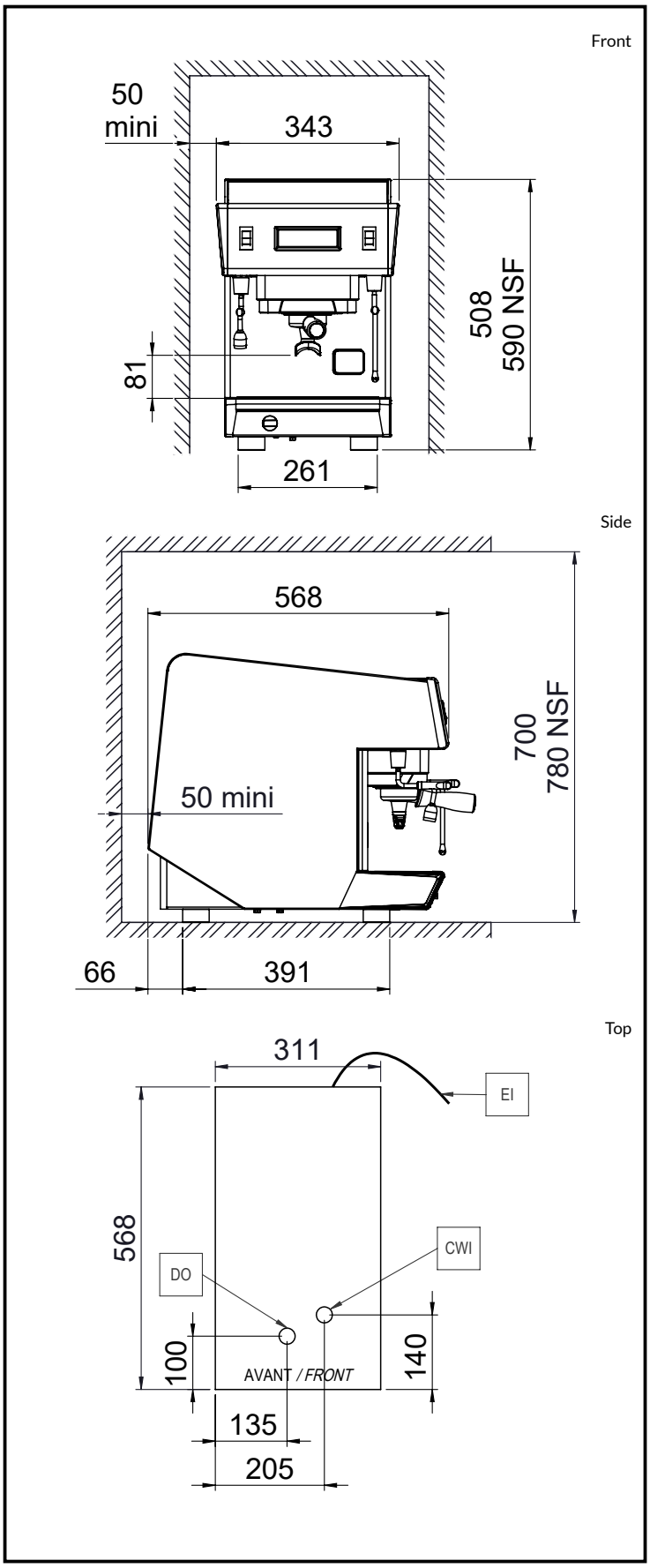

Certifications

The company reserves the right to make modifications to the products without prior notice. All information correct at time of printing.

2024.10.07

Part of Electrolux Professional Group

UNIC